RUBBER HOOK (NORDIC) PXB-GN05-101

White Brown Black Greyish Pink Greyish Yellow Greyish Green Greyish Blue

- Simple and safe design.
- Can be used for drywall.
- Available in a wide range of colors.

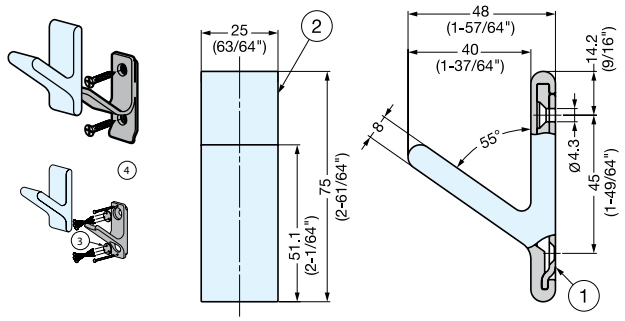

Item No.	Color	Load Capacitykg (lbs)	Weight (g)	Box (pcs)	Carton (pcs)
PXB-GN05-101GWT	White	4.1 (9 lbs)	39	10	100
PXB-GN05-101BR	Brown				
PXB-GN05-101BL	Black				
PXB-GN05-101GPK	Greyish Pink				
PXB-GN05-101GYE	Greyish Yellow				
PXB-GN05-101GGN	Greyish Green				
PXB-GN05-101GBU	Greyish Blue				

No.	Part Name	Material	Finish
①	Base	Zinc Alloy	Nickel
②	Cover	Silicone Rubber	-
③	Drywall Pin	AES	Plain
④	Drywall Screw	Stainless Steel	

RUBBER HOOK (MAGNETIC) PXB-GN05M-101

Grey Green Yellow Navy Blue White Orange

- Magnetic type
- Simple and safe design.
- Available in a wide range of colors.

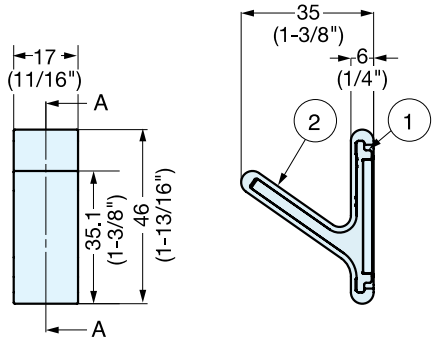

Item No.	Color	Load Capacity kg (lbs)	Weight (g)	Box (pcs)	Carton (pcs)
PXB-GN05M -101GR	Grey	1.1 (2.4 lbs)	32	10	100
PXB-GN05M -101GY	Green Yellow				
PXB-GN05M -101NB	Navy Blue				
PXB-GN05M -101WT	White				
PXB-GN05M -101YR	Orange				

No.	Part Name	Material	Finish
①	Base	Zinc Alloy	Plain
②	Cover	Silicone Rubber	-