Pocket Door Hardware

PD75

75 lb. Panel – Pocket Door

For installation of pocket or bi-parting doors, with 3/4" to 1 3/4" thick panels weighing up to 75 lbs. each.

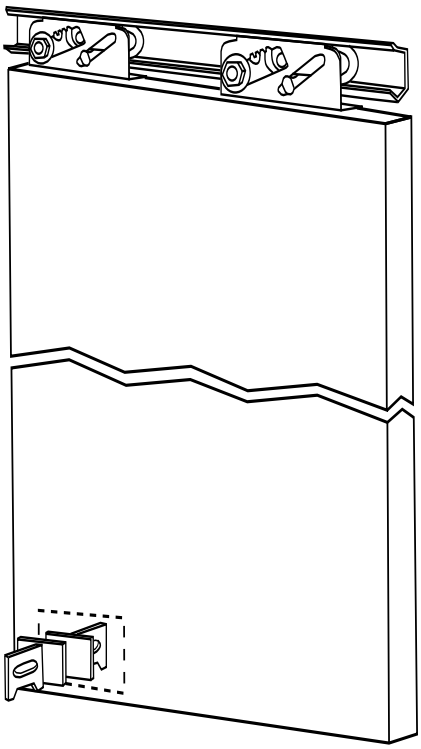

Installation Detail

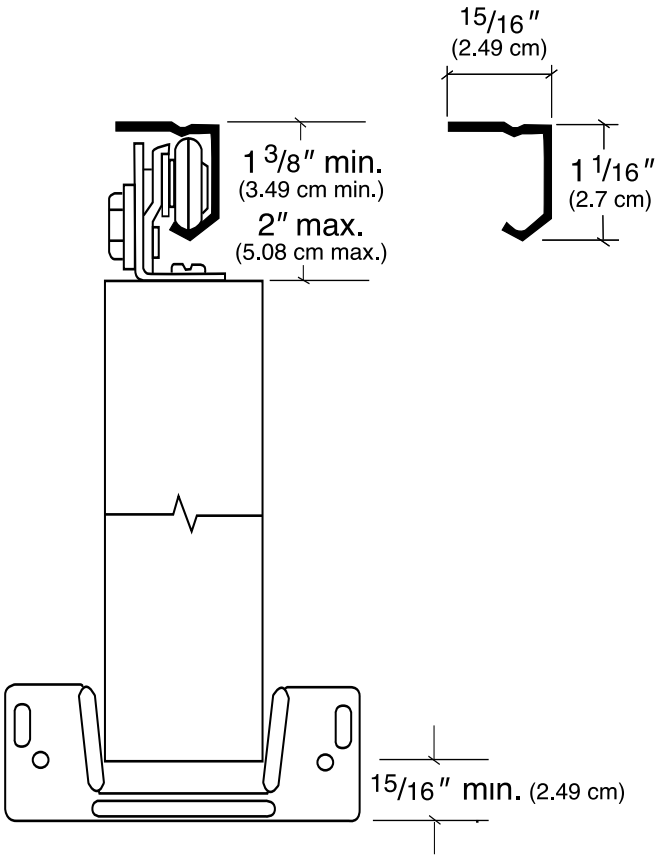

Features

- Self-aligning wheel system
- Permanently lubricated 2-wheel hangers
- Supports panels weighing up to 75 lbs
- Easy adjustment after installation
- Roll-formed galvanized jump proof steel track

ANSI Reference

- PD75 conforms to ANSI A156.14 types D8691, D8721

Cross Reference

- STANLEY 84/85 series • Crowder C-300/350
- Grant 5075 • Johnson 2800

Packaged Set Components

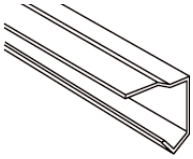

Single Track — EDP No.

PD75-01 — **
V-groove jump proof track
Not available separately

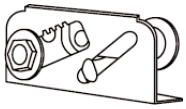

Hanger

BP75-41 — **
Not available separately

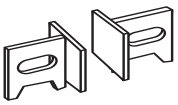

Bottom Guide

PD250-71 — **40 3530 001**
Adjustable to center door in pocket

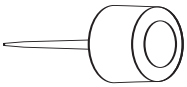

Bumper Stop

PD250-77 — **40 3969 001**
Stop and nail

Adjusting Wrench

BP250-99 — **52 2232 001**

Complete Packaged Sets

RETAIL Box Set with steel track PD75-01

Description	Set No.	Case Qty.	Case Weight	EDP Number
1 Door 36" opening	PD75-00-36	6 sets	18 lbs	40 3903