Amba towel warmers

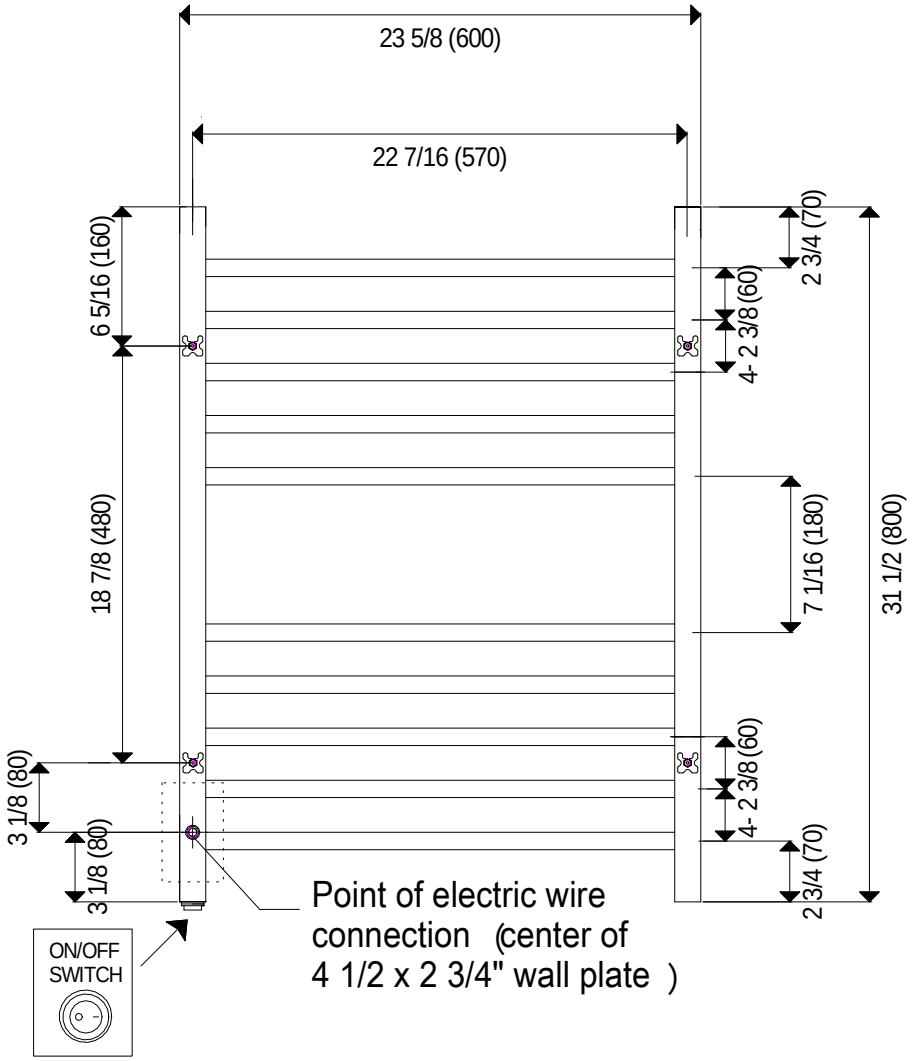

Note: Above drawing shows back of unit. Power connection on the right when mounted on wall.

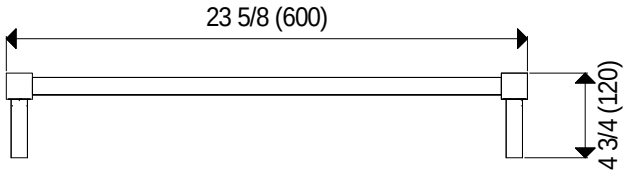

RADIANT Model: RSWH-P or B
Square Hardwired

www.ambaproducts.com
Tel: 404-350-9738

Dimensions are shown in inches (and in mm)